REV	REVISION RECORD	ECN	BY	APVD	DATE
A	INITIAL RELEASE	503385	Pete	PVB	06/03/04
B	ADDED VARIATION PER EWR 104662	504034	BILL	PVB	08/03/05
C	ADDED TAB ID MARK, A1 PLATING	504419	Pete	PVB	04/10/06
D	UPDATED PER EWR 106501	505819	RJB	PVB	07/29/09
E	REVISED TO GENERIC, PER EWR 106798	505966	KR	PVB	10/18/10

NOTES: UNLESS OTHERWISE SPECIFIED

1. INTERPRET DRAWING IN ACCORDANCE WITH ASME Y14.5-1994.
2. PART SUPPLIED ON A CONTINUOUS REEL AS SHOWN, QTY OF TABS PER REEL 5,000 ± 15 %. FEEDER COMPATIBLE SPLICES PERMITTED, 2 SPLICES MAX PER REEL.
3. COMPLIANT TIPS ARE BARE AT CUT-OFF.
4. .010 [0.25] MAX RADII AND FILLET.
5. ASSEMBLY DIMENSIONS ARE MEASURED IN A RESTRAINED STATE.
6. HEADER SIZES CUT FROM A REEL ARE PACKAGED IN BULK. SEE TABLE FOR QTY.
7. CONSULT AUTOSPLICE FOR INSERTION TOOLING.
8. RECOMMENDED .062" THICK PC BOARD HOLE:
   DRILLED HOLE – Ø .0635±.0010 [1.613±0.025]
   COPPER PLATED HOLE – Ø .0595±.0020 [1.511±0.051]
   TIN/LEAD PLATED HOLE – Ø .0585±.0030 [1.486±0.076]

   DRILLED HOLE – Ø .0635±.0010 [1.613±0.025]
   COPPER PLATED HOLE – Ø .0595±.0020 [1.511±0.051]
   NICKEL PLATED HOLE – Ø .0580±.0020 [1.473±0.051]
   GOLD PLATED HOLE – Ø .0580±.0020 [1.473±0.051]
9. A1 PLATING I.D. MARK LOCATION AS SHOWN (EITHER SIDE).

A/S PART NO.	TOTAL NO. OF TABS	"Y" ±.020 [±0.50]	QTY PER PACKAGE (6)
23-1056T00A1[][]	REELED	-	5,000 ±15%
23-1056T05A1[][]	5	.984 [25.00]	500 ±15%
23-1056T04A1[][]	4	.787 [20.00]	
23-1056T03A1[][]	3	.591 [15.00]	1,000 ±15%
23-1056T02A1[][]	2	.393 [10.00]	1,000 ±15%

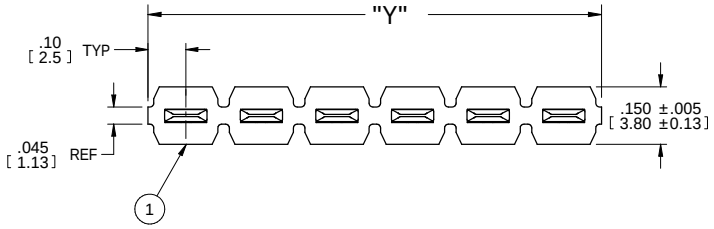

PART NO. / ORDERING CODE

23-1056 T 00 A1 □□

TYPE
1 ROW .197 [5.00] CENTERS

RECT. TAB COMPLIANT

.0315 [0.800] X .110 [2.80]

TOTAL NO. OF POS.

FINISH
AA = .000040"-.000120" [1.02-3.05 MICRONS] BRIGHT TIN/LEAD (90/10) OVER .000050" [1.27 MICRONS] MIN. NICKEL

A1 = .000020"-.000060" [0.50-1.50 MICRONS] BRIGHT TIN/LEAD (90/10) OVER .000050" [1.27 MICRONS] MIN. NICKEL.

DIMENSIONS

CODE	"Z"
A1	.587 [14.90]

(2) 00 = CONTINUOUS REEL

(6) CUT HEADER SIZES:
2 TO 20 POSITIONS
BULK PACKAGED IN POLYBAG
(SEE TABLE FOR QTY)

ADDITIONAL TAB SIZES & LENGTHS CAN BE MADE UPON REQUEST

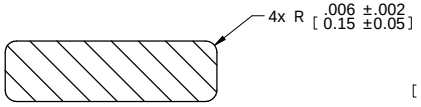

SECTION A-A
SCALE : 20:1

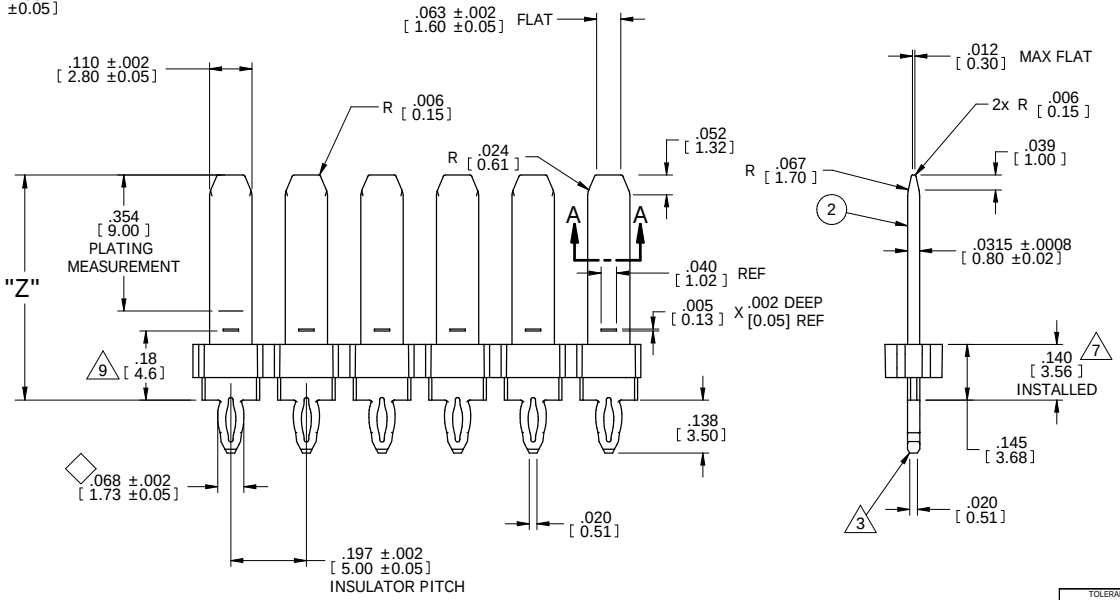

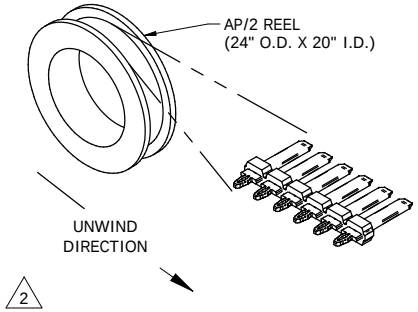

(2) REELED HEADER ORIENTION

MATERIAL:

(1) **INSULATOR:**

THERMOPLASTIC POLYESTER, FLAMMABILITY RATED: UL 94HB
COLOR: BLACK

(2) **PIN:**

PHOSPHOR BRONZE

FINISH:

SEE PART NO. / ORDERING CODE

CONFIDENTIAL CUSTOMER DRAWING

The drawing and the information set forth hereon are the property of Autosplice, Inc. and are to be held in trust and confidence. Publication, disclosure, or use for any purpose not expressly authorizing in writing by Autosplice, Inc. is prohibited.

TOLERANCES UNLESS OTHERWISE SPECIFIED DIMENSIONS IN INCHES [mm]
DECIMAL : .XX = ± .01 [X.X] ±[0.3]; .XXX = ± .004 [X.XX] ±[0.10]
ANGULAR : ± 5°
◇ DENOTES SPECIAL CHARACTERISTIC

autosplice®
Autosplice, Inc.
10121 Barnes Canyon Rd.
San Diego, CA 92121-2725
858-535-0077

THIRD ANGLE PROJECTION
DRAWN BY: Pete — DATE: 8/11/03
ENGINEERED BY: PVB — DATE: 8/11/03
TITLE: AUTOHEADER™, 1 ROW, 5mm CTRS
SIZE: C | FSCM NO.: OAE89 | DRAWING NUMBER: C23-1056[][][][][][][][] | REVISION: E
SCALE: 8:1 | CAD NO: C23-1056[][][][][][][][]E.dft | MODEL NO.: 23-105.6.asm | SHEET 1 OF 1