REV	REVISION RECORD	ECN	BY	APVD	DATE
X2	UPDATE TO 23-1074-01x4 INSULATOR	-	HR	HR	10/06/08
A	INITIAL RELEASE PER EWR 106148	505678	DJA	HR	01/28/09

NOTES: UNLESS OTHERWISE SPECIFIED

1. INTERPRET DRAWING IN ACCORDANCE WITH ANSI Y14.5-1994.
2. PART SUPPLIED ON A CONTINUOUS REEL AS SHOWN, QTY OF TABS PER REEL "TBD" ± 15 %. FEEDER COMPATIBLE SPLICES PERMITTED, 2 SPLICES MAX PER REEL.
3. COMPLIANT TIPS ARE BARE AT CUT-OFF.
4. .010 [0.25] MAX RADII AND FILLET.
5. ASSEMBLY DIMENSIONS ARE MEASURED IN A RESTRAINED STATE.
6. HEADER SIZES CUT FROM A REEL ARE PACKAGED IN THERMOFORMED TRAY.
7. CONSULT AUTOSPLICE FOR INSERTION TOOLING.
8. RECOMMENDED .062" THICK PC BOARD HOLE:

DRILLED HOLE – Ø .0635±.0010 [1.613±0.025]
COPPER PLATED HOLE – Ø .0595±.0020 [1.511±0.051]
TIN/LEAD PLATED HOLE – Ø .0585±.0030 [1.486±0.076]

DRILLED HOLE – Ø .0635±.0010 [1.613±0.025]
COPPER PLATED HOLE – Ø .0595±.0020 [1.511±0.051]
NICKEL PLATED HOLE – Ø .0580±.0020 [1.473±0.051]
GOLD PLATED HOLE – Ø .0580±.0020 [1.473±0.051]

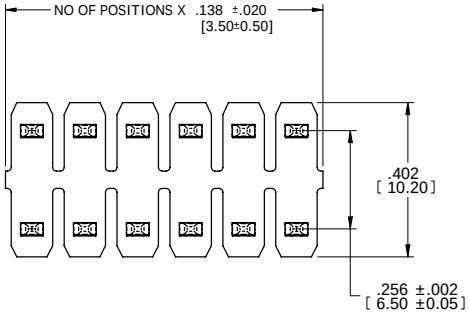

PART NO. / ORDERING CODE

23-1075 T [][] [][] [][]

TYPE
2 ROW .100 [2.54] CENTERS

RECT. PIN COMPLIANT
.032 [0.81] X .059 [1.50]

TOTAL NO. OF POS.
2 00 = CONTINUOUS REEL

6 CUT HEADER SIZES:
2 TO 40 POSITIONS BULK PACKAGED IN THERMOFORMED TRAY

FINISH
AA- .000040 [0.00102] MIN TIN/LEAD (90/10) OVER .000050 [0.00127] MIN NICKEL

TT- .000040 [0.00102] MIN TIN (LEAD FREE) OVER .000080 [0.00203] MIN NICKEL

DIMENSIONS

CODE	Z
A1	.535 [13.59]

ADDITIONAL PIN SIZES & LENGTHS UP TO "Z"=1.575 [40.00] CAN BE MADE UP[ON REQUEST

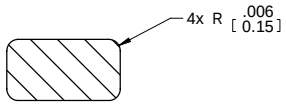

SECTION A-A

SCALE : 20:1

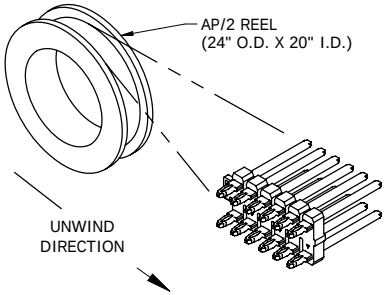

2 REELED HEADER ORIENTION

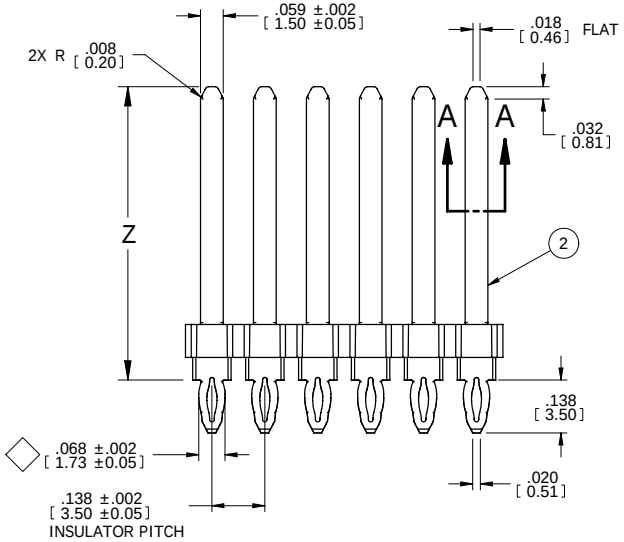

P/N 23-1075T12A1TT SHOWN

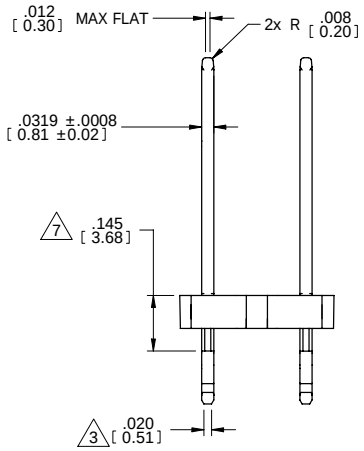

1 **MATERIAL:**

INSULATOR:

GLASS FILLED THERMOPLASTIC POLYESTER, FLAMMABILITY RATED: UL 94HB COLOR: BLACK

2 **PIN:**

COPPER ALLOY

FINISH:

SEE PART NO. / ORDERING CODE

CUSTOMER DRAWING

The drawing and the information set forth hereon are the property of Autosplice, Inc. and are to be held in trust and confidence. Publication, disclosure, or use for any purpose not expressly authorizing in writing by Autosplice, Inc. is prohibited.

TOLERANCES UNLESS OTHERWISE SPECIFIED DIMENSIONS IN INCHES [mm]
DECIMAL : .XX = ± .01 [X.X] ±[0.3]; .XXX = ± .005 [X.XX] ±[0.13]
ANGULAR : ± 5°
DENOTES SPECIAL CHARACTERISTIC

autosplice®
Autosplice, Inc. 10121 Barnes Canyon Rd. San Diego, CA 92121-2725 858-535-0077

THIRD ANGLE PROJECTION

DRAWN BY	PETE	DATE 9/26/08
ENGINEERED BY	PVB	DATE 9/26/08

TITLE: AUTOHEADER , 2 ROW, 3.5mm X 6.5mm CTRS

SIZE	FSCM NO.	DRAWING NUMBER	REVISION
C	OAE89	C23-1075[][][][][][][][]	A

SCALE 8:1 CAD NO. C23-1075[][][][][][][][]a.dft MODEL NO. 23-1075.asm SHEET 1 OF 1